平台式冷藏柜 / 冷冻柜
UNDERCOUNTER REFRIGERATOR/FREEZER

使用说明书
INSTRUCTION MANUAL

RTC-90A-_**
RTC-120A-_**
RTC-150A-_**
RTC-170A-_**
RTC-180A-_**
RTC-125A-_**
RTC-167A-_**
FTC-90A-_**
FTC-120A-_**
FTC-150A-_**
FTC-180A-_**
FTC-125A-_**
FTC-167A-_**

**** : SN, SD, DD**
_ : G, GN, R, ML
ST, LED, E

RTC-120SNA/SDA(-GN)

- 使用说明书是本产品不可分割的重要组成部分，用户须妥善保管。
- 请务必仔细阅读本使用说明书中描述的指南和警告事项，因为这些指南和警告事项为安装人员/用户提供了正确安装、持续安全地使用和保养本产品所需的重要信息。
- 请妥善保管本使用说明书，以便必要时参考使用。

- This booklet is an integral and essential part of the product and should be kept and preserved by the user.
- Please read carefully the guidelines and warnings contained herein as they are intended to provide the installer/user with essential information for the proper installation and the continued safe use and maintenance of the product.
- Please preserve this booklet for any further consultation that may be necessary.

生产商：　星崎电机(苏州)有限公司
Manufacturer:　HOSHIZAKI (SUZHOU) CO., LTD.

L1T012309(082020)

中文

I.概述 1
1.结构 1
2.附件 1
II. 安装和使用说明 1
1.安装位置 1
2.安装方法 2
3.层板和导轨 2
[a] 层板、层板托和层板支架 2
[b] 导轨(定制) 2
4.电气连接 3
5.排水连接 3
6.使用 4
[a] 启动 4
[b] 柜内温度设定 4
[c] 快速制冷 5
[d] 除霜 5
[e] 关机 5
III. 保养和清洁说明 5
1.内部、外部、层板 5
2.空气过滤器 5
IV. 联系维修机构前 6
1.显示故障代码的故障 6
2.未显示故障代码的故障 6
V. 处置 7
VI. 保修 7
VII. 气候类型说明 7

ENGLISH

I. GENERAL INFORMATION 8
1. CONSTRUCTION 8
2. ACCESSORIES 8
II. INSTALLATION AND OPERATING INSTRUCTIONS 8
1. LOCATION 8
2. SET UP 9
3. SHELF AND RAIL 9
[a] SHELF, SHELF CLIP AND SHELF HOLDER 9
[b] RAIL (customized) 10
4. ELECTRICAL CONNECTIONS 10
5. DRAIN CONNECTION 11
6. OPERATION 11
[a] START UP 12
[b] CABINET TEMPERATURE SETTING 12
[c] RAPID REFRIGERATION 13
[d] DEFROST 13
[e] SHUT DOWN 13
III. MAINTENANCE AND CLEANING INSTRUCTIONS 13
1. INTERIOR, EXTERIOR, SHELF 13
2. AIR FILTER 14
IV. BEFORE CALLING A SERVICE AGENT 14
1. TROUBLES WITH ERROR CODE INDICATION 14
2. TROUBLES WITHOUT ERROR CODE INDICATION 15
V. DISPOSAL 15
VI. WARRANTY 15

警告

保持干燥

请勿弄湿本产品或在潜在的潮湿环境下使用本产品。否则可能会导致漏电，进而造成触电或火灾。

重要

1. 本产品为商用冷藏柜 / 冷冻柜，只能用于家用和类似用途，如：
   - 商店、办公室或其他工作场合的厨房区域；
   - 农场以及宾馆、汽车旅店和居住型环境的顾客；
   - 家庭旅馆型环境；
   - 餐饮业和类似的非零售业应用。
   本产品不适合用于任何其他用途，否则可能会造成危险。对于使用不当、错误使用和不合理使用造成的任何损坏，制造商概不负责。

2. 本产品不适合残障、智障及缺乏相应经验和知识的人士（包括儿童）单独使用，除非有专人负责其安全，并对其使用本产品加以监督和指导。另外还应对儿童加以看管，以确保其不玩耍本产品。

I. 概述

1. 结构

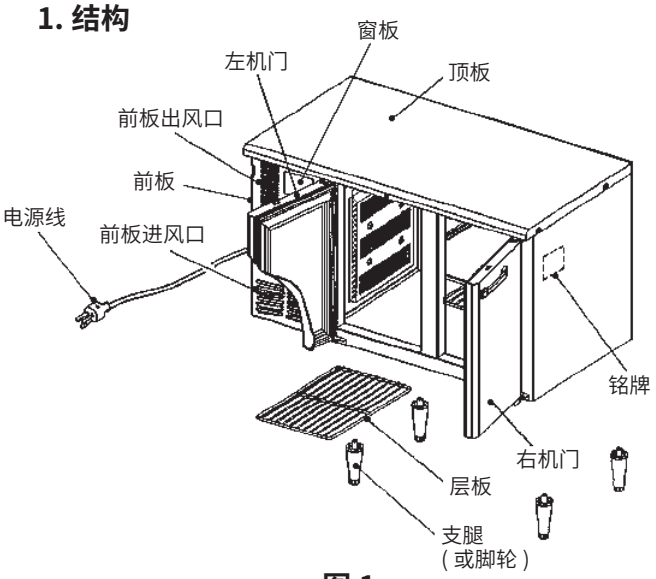

图 1

注： 1. 将提供的四条支腿 (或脚轮) 安装到位于机器底部的安装孔中。
2. RTC/FTC-90**A 需要将 5 个脚全部安装上去。

2. 附件

宽度	900mm	1200/1500mm	1800mm
a) 层板：	2[2]	4[4]	6[6]
b) 层板托：	8[8]	16[16]	24[24]
c) 层板支架：	5[0]	10[0]	15[0]
d) 支脚：	5[5]	4[4]	4[4]

注： 1. 中括号中的数值适用于无层板支架的机型。
2. 定制产品的附件可能会与上述不同。

II. 安装和使用说明

1. 安装位置

重要

本冷藏柜 / 冷冻柜仅供室内使用。正常的工作环境温度应在 5°C至 43°C的范围内。

为了获得最佳性能：

* 请勿将冷藏柜 / 冷冻柜安装在炉子、烤架或其它会产生高温的设备附近。

* 安装位置应坚实，足以承受设备重量。
* 若要调节本机高度，请转动可调节支腿的调节器。本机应始终在左右和前后方向保持水平。

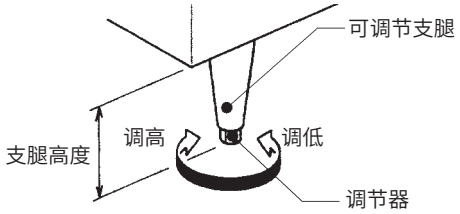

图 2

注意

可调节支腿的高度必须为9～12(某些机型为15～18)cm。如果过度伸长，可能会减弱支腿强度，或者导致调节器脱落，造成意外的人身伤害。

* 避免将其安装在不允许出现滴水的场所。尤其当采用并排或背靠背安装方式 (可以与其他制造商的产品一起安装) 时，由于两台机器之间可能会出现冷凝，从而导致冷凝水会滴落到地板上。

* 请勿将本机暴露在直射阳光或高温下。

* 在本机前板的进风口 / 出风口和墙壁或其它设备之间至少应留出 50cm 间隙，以确保空气流通顺畅。本机前方应留出足够空间，以确保顺畅调节柜内温度。如果环境温度超过 38°C，制冷装置室一侧离墙壁至少应留出 10cm 的间隙，以防止过载并损坏制冷回路。

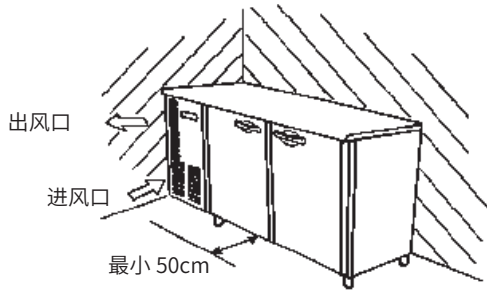

图 3

2. 安装方法

重要

1. 当安装支腿或脚轮时，请勿将本机倾斜超过45°。

2. 搬运本机时，请托住其底部。

1) 剪断绑带，然后拆下纸板箱。

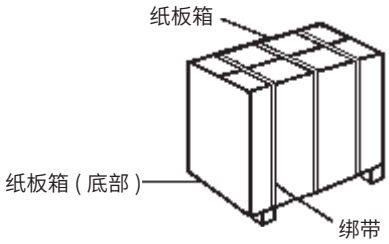

图 4

2) 取出附属的支腿或脚轮。

3) 将本机向后倾斜，以安装前支腿或脚轮 (两人作业)。

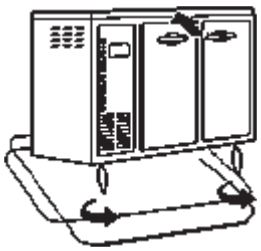

图 5

4) 以相同的方法安装后支腿或脚轮。当安装脚轮时，先锁定两个前脚轮，再安装后脚轮，否则本机在倾斜时会滑倒。

5) 使用本机前，请拆下所有的绑带、包装、胶带以及外壳和顶板上的塑料保护膜。请小心不要损坏外板。

6) 将本机放置在选定的场所。

7) 将软布浸泡在由冷水或温水加适量中性清洁剂混合而成的溶液中，然后取出软布并拧干，再使用该软布清洁本机内部。

8) 本冷藏柜 / 冷冻柜应在左右和前后方向上保持水平。

3. 层板和导轨

[a] 层板、层板托和层板支架

* 层板高度可以 2.5cm 为高度单位进行调节。请根据存放物品的高度调节层板托。

* 若要安装层板托，请将上部凸片插入层板立柱中的调节孔以钩住层板托，然后将下部凸片推入另一个调节孔，直至其锁止到位。若要拆下层板托，请按照相反的步骤进行操作。

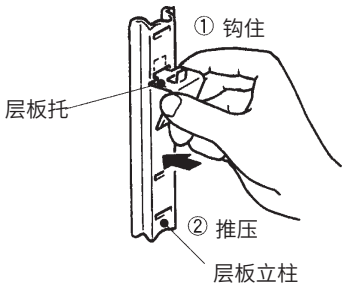

图 6

注意

请正确安装层板托，以保持层板水平。

* 如下图所示，将层板放于柜体的底部，然后在左右边框和中间边框处分别安装两个和一个层板支架。

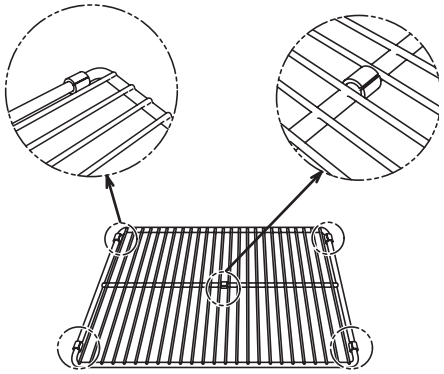

图 7

重要

请勿在柜体底部放置任何物品，以防止柜体底部受损或变形，从而导致腐蚀。

[b] 导轨(定制)

* 若要安装导轨，(1)请将导轨挂钩向后推入后层板立柱上的方孔，(2)然后将导轨挂钩向下推入前层板立柱上的方孔。若要拆下导轨，请按照与上述相反的步骤操作。参见图8。

注意

请正确安装导轨，以使导轨保持水平。

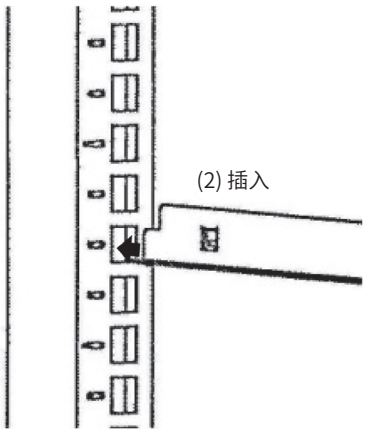

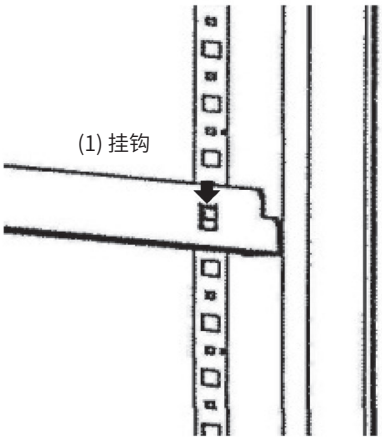

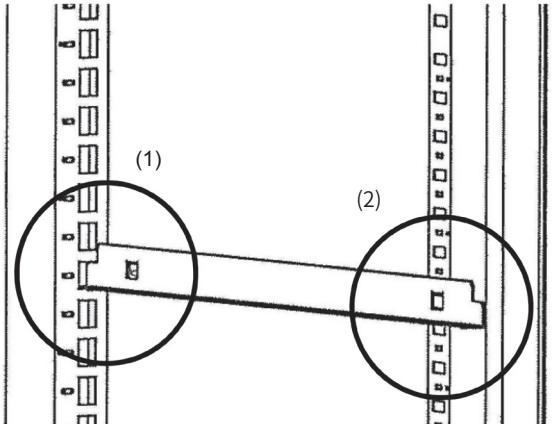

图 8

4. 电气连接

重要

本冷藏柜 / 冷冻柜不带电源开关或漏电断路器，仅配备过流保护 (保险丝)。请在主电源上安装一个额定电流至少为 10A 的开关。

* 本冷藏柜/冷冻柜的插头必须插入单独的电源插座，且该插座必须方便插拔并具有足够的容量。允许的最大电压波动不得超过铭牌额定电压的±10%。请参见铭牌。

* 如需更换电源线和插头，务必联系合格的维修工程师来开展这项工作，以免发生危险。

5. 排水连接

小心

请务必切实连接好排水软管。否则，排水软管可能漏水，并破坏周围环境。

1) 将附属的挠性软管连接至位于机器底部的排水出口。

2) 如图所示，将挠性软管弯曲形成一个存水弯。使用附属的电缆扎带，将挠性软管牢牢地固定在机器底部(配有安装孔)。

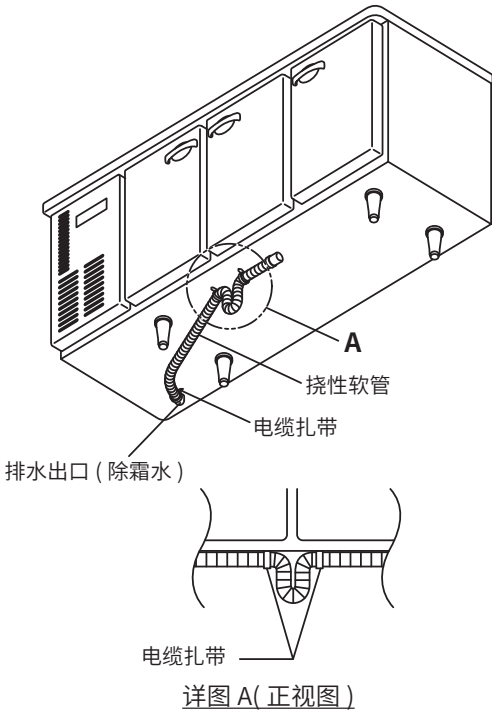

图 9

重要

1. 为防止断开，请务必使用电缆扎带，将挠性软管固定到位。

2. 排水管路应尽量短而直，向下倾斜并且置于排水出口的下方。

3. 为防止逆流，请勿直接将挠性软管连接到排水系统。在挠性软管的末端和地漏之间至少应留出 5cm 的空隙。

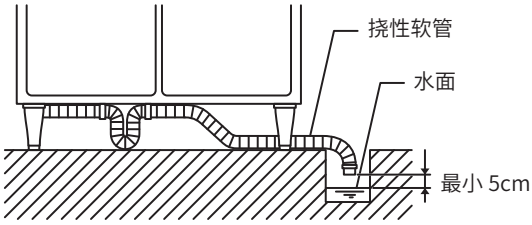

4. 如果挠性软管过短而不能伸到地漏处，请用一根市售管连接到挠性软管。请务必在排水管的末端和地漏之间至少留出 5cm 的空隙。

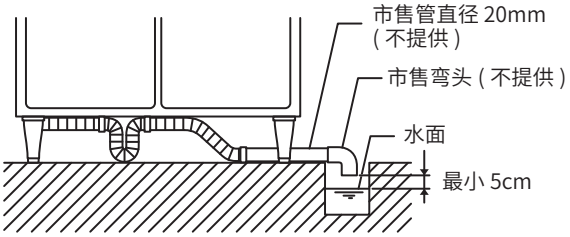

5. 排水连接时，应防止周围空气在蒸发器上结成过多的霜，进而造成制冷能力下降。
6. 在水流入地漏之前，请勿让水直接排到地面上。地面上的异物可能会混入水中并堵塞地漏，或者水可能会朝错误的方向流动。

6. 使用

重要

1. 请小心不要弄湿制冷装置室。否则可能会导致本机故障或触电。
2. 为防止触电，请勿用湿手触摸连接插头。
3. 请勿在本机中存放易挥发或易燃物品，如汽油、乙醚、粘合剂和 LPG。
   以及不得贮存爆炸物，如助燃喷雾剂。
4. 本冷藏柜 / 冷冻柜的设计用途是临时存放食物。将其用于任何其他用途 (例如，存放疫苗、血清等化学或医学用品) 可能会导致存放的物品变质。
5. 请勿将物品抛掷到层板上或者在单块层板上放置 60kg 以上的物品。否则层板可能会跌落并造成伤害。
6. 请勿在出风口处存放玻璃瓶或易拉罐。它们可能会结冰甚至破裂，进而造成伤害危险。
7. 请勿使用可燃喷雾，或将挥发性和易燃物品放置在本机附近。操作开关或类似装置时产生的火花可能会导致它们着火。
8. 请勿在制冷装置室或进风口 / 出风口中放置任何物品。内部高速旋转的风扇可能会造成人员受伤或产生高温。
9. 在柜内放置食物前，请让冷藏柜 / 冷冻柜通电 1 小时，并检查温度是否正常。
10. 请勿将食物放置在遮挡进风口 / 出风口的位置。
11. 请勿在柜内塞满食物。请在食物之间留出一定的空间，以确保空气流通顺畅。
12. 请勿放入温热或滚烫的食物。请首先让食物自然冷却，否则会导致柜内温度上升，并可能会造成柜内存放的其它食物变质或导致冷藏柜 / 冷冻柜过载。
13. 确保所有物品在各个层板上摆放有序。
14. 潮湿或新鲜的食物以及海鲜等具有强烈气味的食物应使用保鲜膜包裹起来或存放在容器中。否则，这些食物可能会变干或使得其他食物沾染上它们的气味。
15. 含有醋酸或酵母的食物应使用保鲜膜包裹起来。否则，它们可能会加速蒸发器和铜管的腐蚀过程，进而导致故障。
16. 直接食用的食物应放置在合适的容器内，并且避免与柜壁直接接触。
17. 请勿使用冷冻柜来冷冻食物。冷冻柜仅用来存放冷冻食物。除霜过程中，高品质冰激凌可能会融化，因此不应将其存放在冷冻柜中。
18. 关闭机门后，由于柜内产生负压，因此难以立即打开刚关闭的机门。请等待约 30 秒。
19. 本产品不适合残障、智障及缺乏相应经验和知识的人士 (包括儿童) 单独使用，除非有专人负责其安全，并对其使用本产品加以监督和指导。
    另外还应对年幼儿童加以看管，以确保其不玩耍本产品。

[a] 启动

1) 插入本机插头。

2) 压缩机和冷凝器风扇马达将在 3.5 分钟内启动。

[b] 柜内温度设定

柜内温度在出厂时设为 3°C (用作冷藏柜时) 和 -18°C (用作冷冻柜时)。如果需要，请按照如下方法重新调节温度：

1) 打开前板。

2) 按设置点按钮以显示当前设置点温度。

3) 按住设置点按钮，并按温度控制按钮，直至温度显示窗口显示所需的温度。可以在 -6°C和 12°C之间 (用作冷藏柜时) 以及 -7°C和 -25°C之间 (用作冷冻柜时) 调节柜内温度。

   注：当环境温度超过 30°C时，可能无法在上述温度范围内进行调节。

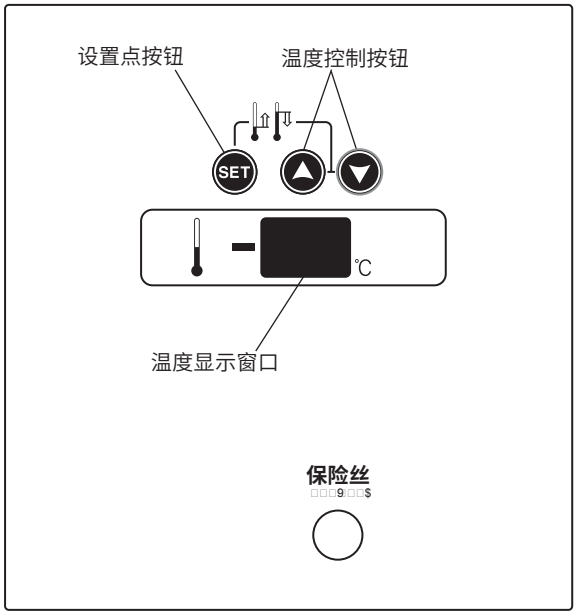

图 10

4) 将冷柜显示温度调节到与未储藏食物时冷柜中央的温度几乎相同。但是，根据储藏食物的布局、冷柜门开启的频率或测量点的不同，显示温度与实际温度会有所不同。

[c] 快速制冷

若要快速冷却存放的食物，请选择快速制冷模式。 内部风扇马达将连续运转以加速制冷。

1) 按住温度控制按钮(向下)5秒钟，以连续运转内部风扇马达。在快速制冷期间，温度显示窗口上的小数点将消失。

2) 若要恢复正常运转，请按住温度控制按钮(向下)5秒钟。温度显示窗口上的小数点将重新显示。

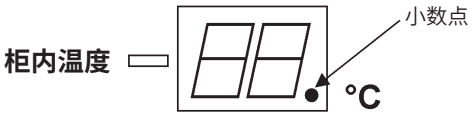

图 11

[d] 除霜

冷藏柜 / 冷冻柜会每隔 6 个小时自动对蒸发器除霜。温度显示窗口会在除霜过程中显示“dF”。
若要启动手动除霜过程，请同时按住两个温度控制按钮一段时间。下一次除霜过程将在 6 个小时后开始。

[e] 关机

1) 关机前，请将存放的食物移至另一台冷藏柜 / 冷冻柜。

2) 拔下插头或断开主电源。

3) 长时间不使用机器时，请清洁柜内部和机门衬垫，并将它们彻底晾干，然后将机器保管在干燥场所。

III. 保养和清洁说明

重要

1. 进行清洁或保养操作前，请拔下本机插头。
2. 请勿触摸或弄湿制冷装置室零件。 否则可能会导致本机故障或损坏。
3. 请勿将塑料零件放入温度超过 40°C的水中或洗碗机中清洗，以免损坏零件。

1. 内部、外部、层板

* 为保持冷藏柜 / 冷冻柜清洁，至少每隔一星期清洁冷藏柜 / 冷冻柜内部和外部一次。如需移动本机，请解锁脚轮 [带脚轮的机型]。

* 将软布浸泡在由冷水或温水加适量中性清洁剂混合而成的溶液中，然后取出软布并拧干，再使用该软布清洁本机内部和外部。请勿通过喷水的方式清洁制冷装置室。

* 使用中性清洁剂以外的化学溶液可能会导致内部和外部表面损坏。

* 任何洗涤剂残留都将损伤金属或塑料表面，因此请使用蘸有温水的软布将其擦除。

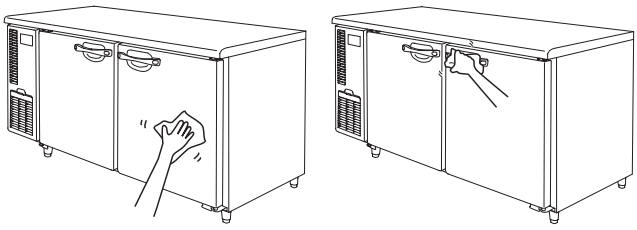

图 12

* 请勿使用下列物品，以免其损坏喷漆或塑料表面：抛光粉、酒精、稀释剂、挥发油、酸性或碱性洗涤剂、热水、石油精、肥皂粉、金属打磨工具或刷子等。尤其不可使用专用于清除通风设备或微波炉上油脂的洗涤剂。

图 13

注：上述以外的洗剂也有可能会损伤涂装保护面及塑料表面。
出现异常时请立即停止使用。

* 机门衬垫及其接触表面很容易变脏， 请彻底清洁这些零件的表面。否则，食物残渣会加速这些零件的老化过程。

* 使用布擦去柜内的积水。

2. 空气过滤器

重要

为防止空气过滤网变形，请勿使用 40°C以上的热水清洗空气过滤网。

该塑料滤网型空气过滤器可以清除空气中的污垢或灰尘，防止冷凝器堵塞。如果过滤器堵塞，冷藏柜 / 冷冻柜的制冷性能将下降。至少每月检查过滤器两次。如果过滤器堵塞，请使用温水和中性清洁剂进行清洗。请勿在空气过滤器已拆下的情况下使用本机，否则会导致冷凝器堵塞，进而造成本机故障。

1) 打开前板，然后拆下空气过滤器。为防止人员受伤，请勿直接触摸冷凝器翅片。

2) 使用含有适量中性清洁剂的冷水或温水，小心地清洗空气过滤器。冲洗并彻底晾干空气过滤器。

3) 若要重装空气过滤器，请先将其卡入冷凝器的底部，然后安装到冷凝器上。

4) 关闭前板。

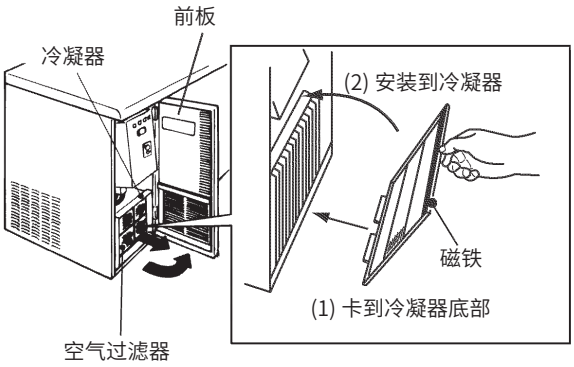

图 14

IV. 联系维修机构前

重要

1. 如果操作面板上的温度显示窗口显示故障代码或本机似乎有问题，请根据以下说明检查可能的故障原因。如果故障仍然存在，请立即联系授权的星崎维修公司。

2. 联系维修公司时，请向对方说明机器型号、序列号、安装日期 (参见保修卡) 以及故障状况。

3. 请勿尝试自行维修本机。

1. 显示故障代码的故障

当操作面板上的温度显示窗口交替闪烁故障代码和柜内温度时，请检查故障代码并遵照以下说明。

1) 如果显示下列故障代码之一，请立即联系授权的星崎维修公司。

代码	故障
E3	除霜时间过长。
E8，E9	热敏电阻故障。
EA，ED	电脑板故障。

2) 如果显示下列故障代码之一，请根据以下说明检查并校正机器状况。

代码	故障及补救措施
E1	柜内温度过高。 (1) 机门打开。关闭机门。 (2) 柜内存放了温热或滚烫的食物。将其取出。 (3) 环境温度过高。避免将本机安装在产生高温的设备附近或暴露在直射阳光下。
E2	柜内温度过低。 (1) 环境温度过低。在环境温度为5°C至43°C的范围内使用本机。 (2) 冷冻食物正在解冻。当解冻完成时，故障代码将消失。
E4，E7	冷凝器堵塞或环境温度过高。 (1) 空气过滤器堵塞。清洁过滤器。 (2) 环境温度过高。避免将本机安装在产生高温的设备附近或暴露在直射阳光下。

E1，E2：当恢复适当的柜内温度时进行自动重置。
E4，E7：进行上述检查和校正后，请关闭电源，再重新打开。

如果在完成上述检查和校正后温度显示窗口中仍然出现故障代码，请立即联系授权的星崎维修公司。

2. 未显示故障代码的故障

1) 本机无法运转：

(1) 拔下了插头。

(2) 停电。

(3) 主电源断开。

2) 制冷性能不佳：

(1) 环境温度过高 (43°C以上)。

(2) 频繁打开机门。

(3) 设定的柜内温度过高。

(4) 柜内塞满了食物或进风口 / 出风口阻塞。

(5) 空气过滤器变脏。

(6) 机门打开。

(7) 柜内存放了温热或滚烫的食物。

(8) 机器处于除霜过程。在除霜过程中，柜内温度可能会暂时上升，但不会影响柜内的食物。

3) 机门附近出现冷凝水：

(1) 环境湿度过高。

(2) 机门未关紧。

4) 噪声：

(1) 压缩机、冷凝器风扇马达或内部风扇马达的正常工作声。

(2) 安装在不坚实的地面。请联系授权的星崎维修公司。

(3) 未在左右或前后方向上保持水平。请联系授权的星崎维修公司。

5) 制冷装置室内部结霜：

(1) 环境湿度过高。

(2) 频繁打开机门。

V. 处置

处置冷藏柜 / 冷冻柜时，请联系授权的星崎维修公司或指定的废品回收公司。

重要

用于机体的隔热材料发泡剂含有易燃气体环戊烷 。请记住这一点，正确处置冷藏柜/冷冻柜。

VI. 保修

星崎向原始拥有者 / 用户保证，所有星崎品牌产品在产品“保修期”内不存在材料和 / 或工艺缺陷。产品保修在自产品安装之日起一年内有效。
星崎在此保修条款下承担有限责任，且不应包括日常维修、清洁、必需的保养和 / 或因误用以及未根据星崎指南安装导致的维修。

保修范围内的维修应由授权的星崎经销商或维修机构负责，且应使用纯正星崎零件。

若要获取有关保修和授权维修机构的详细信息，请联系经销商 / 供应商或最近的星崎维修办事处。

VII. 气候类型说明

●热带型（代号为T或5）：适宜的使用环境温度为18C°~43°C;

●亚热带型（代号为ST或4）：适宜的使用环境温度为18C°~38°C;

●温带型（代号为N或3）：适宜的使用环境温度为16C°~32°C;

●亚温带型（代号为SN或2）：适宜的使用环境温度为10C°~32°C;

制品标准番号：
GB 4706.1
GB 4706.13
GB 4343.1
GB 17625.1

安全注意事项

有毒有害物质元素分析

商用制冰机、商用冰箱、商用电磁烹饪机、商用啤酒机的环保标识和产品中非环保类物质或元素的名称及含量的说明

1.产品中非环保类物质或元素的名称及含量：

部件名称	对象机种(型号)	非环保类物质或元素					
		铅及其化合物	汞及其化合物	镉及其化合物	六价铬及其化合物	多溴联苯及其化合物	多溴二苯醚及时化合物
		(Pb)	(Hg)	(Cd)	(Cr(VI))	(PBB)	(PBDE)
填充阀	制冰机全型号、冰箱全型号、啤酒机	×	○	○	○	○	○
供电板	冰箱（HRE-*B;HFE-*B;HRFE-*B）	×	○	○	○	○	○
风扇马达	冰箱（HRE-*B;HFE-*B;HRFE-*B）	×	○	○	○	○	○

○：表示该有害物质在该部件所有均质材料中的含量均在GB/T 26572规定的限量要求以下。
×：表示该有害物质至少在该部件的某一均质材料中的含量超出GB/T 26572规定的限量要求。
注：本产品的部件均采用无毒无害的绿色环保材料制造，所含有的非环保类物质或元素皆由于全球的技术和工艺水平限制而无法实现非环保类物质或元素的完全替代，但本产品中非环保类物质或元素的含量极其微少，长期使用不会对人体产生危害，请放心使用。

2.环保标识的说明：

本产品根据国家法规《电器电子产品有害物质限制使用管理办法》的相关规定，采用了行业标准《SJ/T 11364 电子电气产品有害物质限制使用标识要求》中电子电器产品有害物质控制标志。

3.废弃电子电器产品回收处理说明：

为了更好的关爱及保护地球，当用户不再需要此产品或产品寿命终止时，请遵守国家废弃电子电器产品回收处理相关法律法规，将其交给当地具有国家认可的回收处理资质的厂商进行回收处理。

型号别能效标识参数

规格型号	有效容积	总能量消耗	温度分级	冷柜类型	能效等级
RTL-108MA	21	2.67	M1	VC5	4
RTL-148MA	42	2.77	M1	VC5	4
RTL-188MA	63	3.35	M1	VC5	5
RTC-125DDA	129	3.36	M1	VC5	5
RTC-167DDA	194	1.41	M1	VC5	1
RTC-90SNA	122	1.99	M1	VC5	2
RTC-90SNA-R	122	1.99	M1	VC5	2
RTC-90SDA	159	1.98	M1	VC5	2
RTC-90SDA-R	159	1.98	M1	VC5	2
RTC-120SNA	188	2.51	M1	VC5	3
RTC-120SNA-R	188	2.51	M1	VC5	3
RTC-120SNA-ML	188	2.51	M1	VC5	3
RTC-120SDA	247	2.72	M1	VC5	3
RTC-120SDA-R	247	2.72	M1	VC5	3
RTC-120SDA-ML	247	2.72	M1	VC5	3
RTC-150SNA	258	3.00	M1	VC5	4
RTC-150SNA-R	258	3.00	M1	VC5	4
RTC-150SNA-ML	258	3.00	M1	VC5	4
RTC-150SDA	337	2.93	M1	VC5	3
RTC-150SDA-R	337	2.93	M1	VC5	3
RTC-150SDA-ML	337	2.93	M1	VC5	3
RTC-180SNA	324	3.39	M1	VC5	5
RTC-180SNA-R	324	3.39	M1	VC5	5
RTC-180SNA-ML	324	3.39	M1	VC5	5
RTC-180SDA	424	3.42	M1	VC5	4
RTC-180SDA-R	424	3.42	M1	VC5	4
RTC-180SDA-ML	424	3.42	M1	VC5	4

标识参考图样：

玻璃门标识参考图样：

玻璃门机种能效标识参数

规格型号	有效容积	总能量消耗	温度分级	冷柜类型	能效等级	展示面积
RTC-120SNA-G	188	2.96	M1	VC4	3	0.43
RTC-120SDA-G	247	2.99	M1	VC4	3	0.43
RTC-150SNA-G	258	3.46	M1	VC4	2	0.58
RTC-150SDA-G	337	3.38	M1	VC4	2	0.58
RTC-180SNA-G	324	4.28	M1	VC4	2	0.73

型号别能效标识参数

规格型号	有效容积	总能量消耗	温度分级	冷柜类型	能效等级
FTC-90SNA	122	5.19	L1	VF5	5
FTC-90SNA-R	122	5.19	L1	VF5	5
FTC-90SDA	159	5.53	L1	VF5	5
FTC-90SDA-R	159	5.53	L1	VF5	5
FTC-120SNA	188	5.79	L1	VF5	4
FTC-120SNA-R	188	5.79	L1	VF5	4
FTC-120SNA-ML	188	5.79	L1	VF5	4
FTC-120SDA	247	6.16	L1	VF5	4
FTC-120SDA-R	247	6.16	L1	VF5	4
FTC-120SDA-ML	247	6.16	L1	VF5	4
FTC-150SNA	258	6.34	L1	VF5	4
FTC-150SNA-R	258	6.34	L1	VF5	4
FTC-150SNA-ML	258	6.34	L1	VF5	4
FTC-150SDA	337	8.17	L1	VF5	4
FTC-150SDA-R	337	8.17	L1	VF5	4
FTC-150SDA-ML	337	8.17	L1	VF5	4
FTC-180SNA	324	8.07	L1	VF5	4
FTC-180SNA-R	324	8.07	L1	VF5	4
FTC-180SNA-ML	324	8.07	L1	VF5	4
FTC-180SDA	424	8.86	L1	VF5	4
FTC-180SDA-R	424	8.86	L1	VF5	4
FTC-180SDA-ML	424	8.86	L1	VF5	4

标识参考图样：

WARNING

Keep Dry

Do not wet this product or use it in potentially wet conditions. This may cause electric leakage, resulting in electric shock or fire.

IMPORTANT

1. This is a commercial refrigerator/freezer intended to be used in household and similar applications such as:
   - staff kitchen areas in shops, offices and other working environments;
   - farm houses and by clients in hotels, motels and other residential type environments;
   - bed and breakfast type environments;
   - catering and similar non-retail applications.
   Any other use should be considered improper and therefore dangerous. The manufacturer will not be held liable or responsible for any damage caused by improper, incorrect and unreasonable use.

2. This appliance is not intended for use by persons (including children) with reduced physical, sensory or mental capabilities, or lack of experience and knowledge, unless they have been given supervision or instruction concerning use of the appliance by a person responsible for their safety. Children should be supervised to ensure that they do not play with the appliance.

I. GENERAL INFORMATION

1. CONSTRUCTION

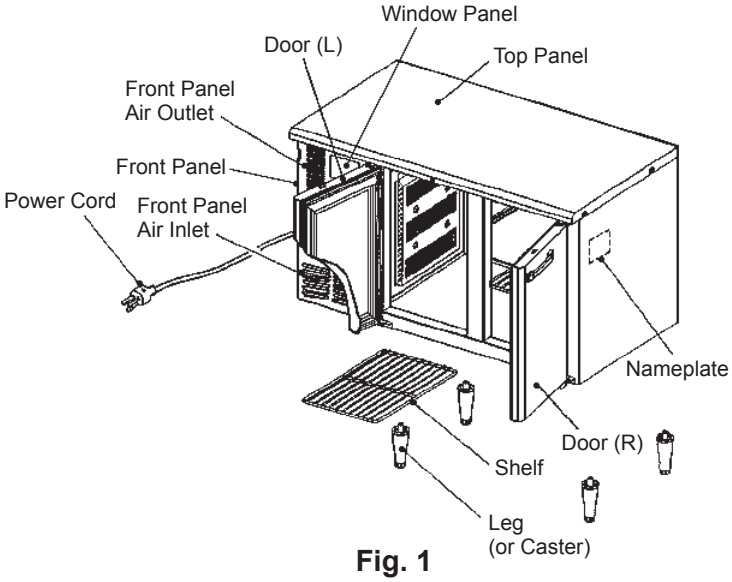

Fig. 1

Note: 1. Attach the four legs (or casters) provided to the mounting holes located at the bottom of the unit.

2. For RTC/FTC-90**A, attach the five legs provided to the mounting holes located at the bottom of the unit.

2. ACCESSORIES

Width	900mm	1200/1500mm	1800mm
a) Shelf:	2 [2]	4 [4]	6 [6]
b) Shelf clip:	8 [8]	16 [16]	24 [24]
c) Shelf holder:	5 [0]	10 [0]	15 [0]
d) Leg:	5 [5]	4 [4]	4 [4]

Note: 1. Numbers in parentheses are for models without shelf holders.
2. Customized products may have different numbers and specifications of accessories.

II. INSTALLATION AND OPERATING INSTRUCTIONS

1. LOCATION

IMPORTANT

This refrigerator/freezer is not intended for outdoor use. Normal operating ambient temperature should be within 5°C to 43°C.

For best operating results:

* The refrigerator/freezer should not be located next to ovens, grills or other high heat producing equipment.

* The location should provide a firm foundation for the equipment.

* To adjust the height of the unit, turn the adjusters of the adjustable legs. The unit should always be level from side to side and back to front.

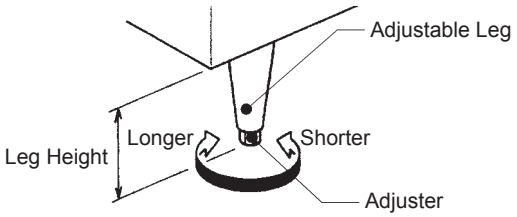

Fig. 2

CAUTION

The height of the adjustable legs must be within 9 - 12 cm (or 15 - 18 cm for some models). If extended too much, the legs may become weak or the adjusters can come off, causing unexpected injuries.

* Avoid a site where dripping is not allowed. Especially, a side-by-side or back-to-back installation (possibly with other manufacturer's unit) may cause condensation between the two units, resulting in dripping onto the floor.

* Do not expose the unit to direct sunlight or higher temperatures.

* Allow at least 50 cm clearance between the front panel air inlet/outlet and the wall or other equipment for proper air circulation. The front of the unit should have enough space for smooth adjustment of the cabinet temperature. If the ambient temperature can exceed 38°C, allow at least 10 cm clearance from the wall at the side of the machine compartment to prevent overloading and damaging the refrigeration circuit.

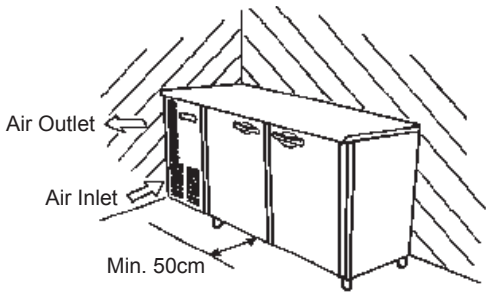

Fig. 3

2. SET UP

IMPORTANT

1. Do not tilt the unit more than 45° when mounting the legs or casters.
2. Carry the unit by holding its bottom.

1) Cut the shipping band and remove the carton.

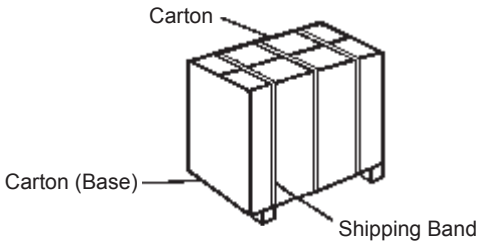

Fig. 4

2) Take out the accessory legs or casters.

3) Tilt the unit backward to mount the front legs or casters (work in pairs).

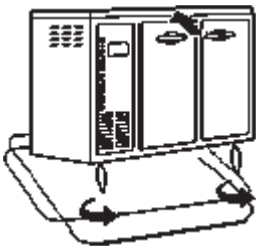

Fig. 5

4) Mount the rear legs or casters in the same way. When mounting the casters, lock the two front casters before mounting the rear ones, or the unit will slide when tilted.

5) Before operating the unit, remove all shipping carton, packing, tape(s) and protective plastic film on the exterior and top panel. Be careful not to damage the exterior panels.

6) Position the unit in a selected site.

7) Clean the interior with a soft cloth soaked in cold or warm water containing the proper amount of neutral cleaner and wrung dry.

8) Level the refrigerator/freezer in both the left-to-right and the front-to-rear directions.

3. SHELF AND RAIL

[a] SHELF, SHELF CLIP AND SHELF HOLDER

* The shelf is adjustable in 2.5 cm increments. Adjust the shelf clips according to the height of stored items.

* To attach the shelf clip, insert the upper tab into an adjust hole in the shelf post to hook the shelf clip, and push the lower tab into another adjust hole until it locks in place. To detach the shelf clip, reverse the above procedure.

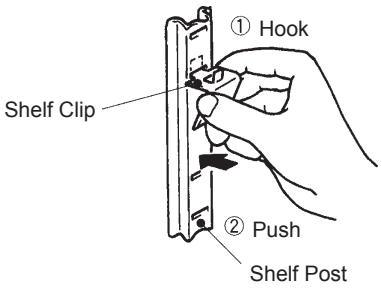

Fig. 6

CAUTION

Attach the shelf clips properly to make the shelf level.

* To lay the shelf at the bottom of the cabinet, attach two shelf holders each to the left and right frames and one to the center frame as shown below.

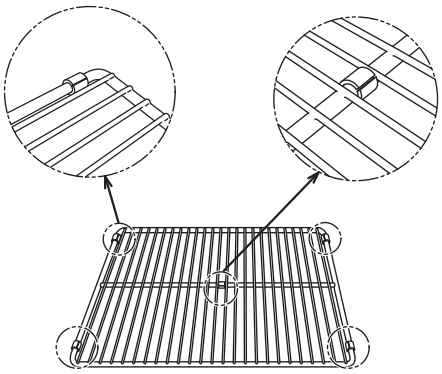

Fig. 7

IMPORTANT

Do not put anything at the bottom of the cabinet to prevent damage or deformation to the cabinet bottom, resulting in corrosion.

[b] RAIL (customized)

* To attach the rail, (1) push the rail hook backwards to fit into the square hole in the rear shelf post, and (2) push the rail hook down to fit into the square hole in the front shelf post. To detach the rail, reverse the above procedure. See Fig. 8.

CAUTION

Attach the rail properly to make it level.

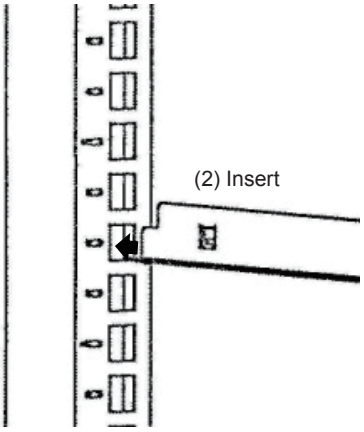

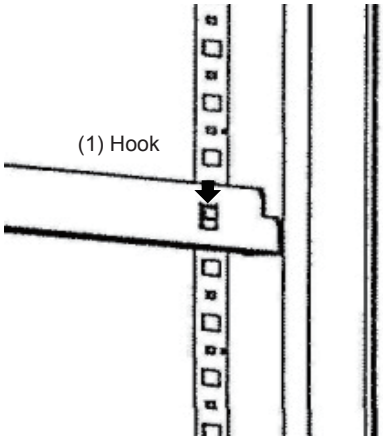

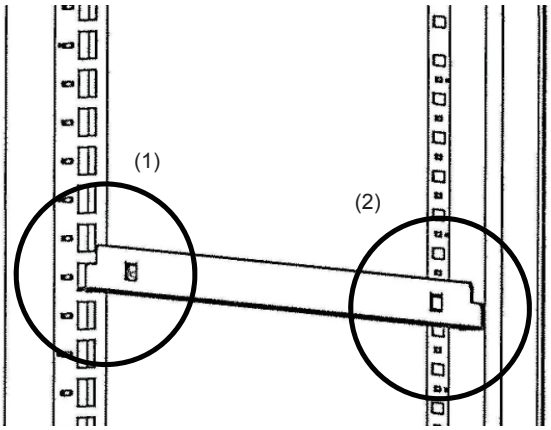

Fig. 8

4. ELECTRICAL CONNECTIONS

IMPORTANT

This refrigerator/freezer is provided with no power switch or earth leakage circuit breaker, but with overcurrent protection (fuse) only. Install a switch rated at least 10A on the main power supply.

* This refrigerator/freezer must be plugged into the separated power receptacle which is readily accessible and has enough capacity. The maximum allowable voltage variation should not exceed ± 10 percent of the nameplate rating. See the nameplate.

* If the supply cord and the plug should need to be replaced, it should only be done by a qualified service engineer to avoid any danger.

5. DRAIN CONNECTIONS

CAUTION

Be sure to connect the drain hoses properly. Otherwise water leaks from the drain hoses may damage the surroundings (property).

1) Connect the accessory flexible hose to the drain outlet located at the bottom of the unit.

2) Bend the flexible hose into a trap as shown. Use the accessory cable straps to fix the flexible hose tightly on the bottom of the unit (mounting holes provided).

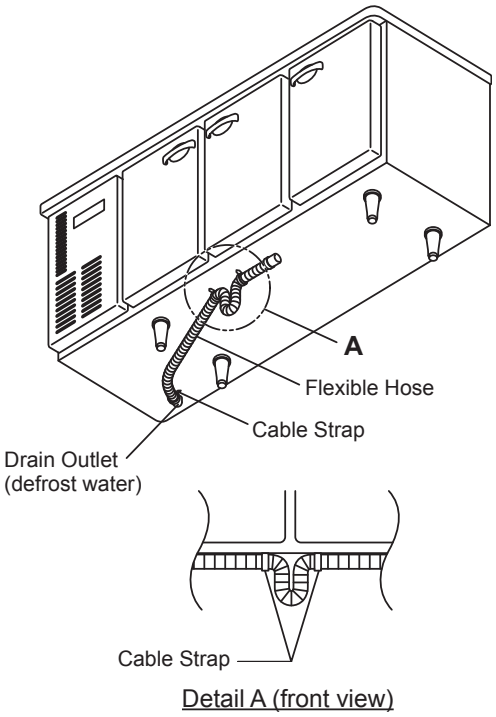

Fig. 9

IMPORTANT

1. To prevent disconnection, be sure to use the cable straps to secure the flexible hose in place.

2. The drain line should be as short and straight as possible, sloped downward, and located below the drain outlet.

3. To prevent backflow, do not connect the flexible hose directly to the sewer system. An air gap of at least 5 cm should be between the end of the flexible hose and the floor drain.

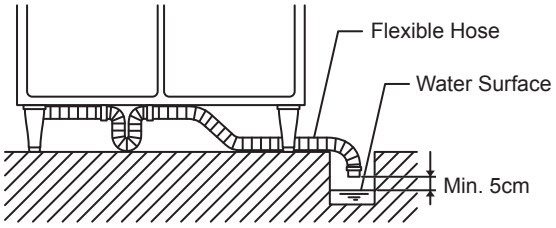

4. If the flexible hose is too short to reach the floor drain, connect a commercial pipe to the flexible hose. Be sure to allow an air gap of at least 5 cm between the end of the drain pipe and the floor drain.

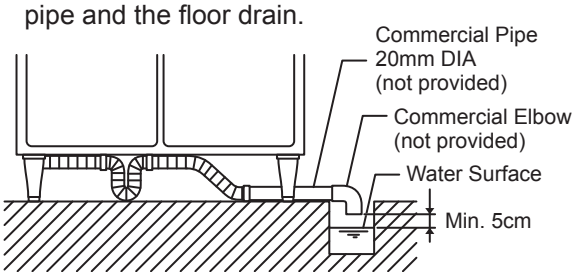

5. The drain connections are required to prevent ambient air from causing excessive frost build up on the evaporator, resulting in reduction of the refrigeration capacity.

6. Do not let water drain directly onto the floor before running into the drain. Foreign matter on the floor may mix into the water and clog the drain, or the water could run in a wrong direction.

6. OPERATION

IMPORTANT

1. Be careful not to wet the machine compartment. This might cause failure or electric shock hazard.

2. To prevent electric shock, do not touch the attachment plug with wet hands.

3. Do not store any volatile or flammable substances such as benzine, ether, adhesives and LPG, or any explosive substances such as aerosol cans with a flammable propellant in the unit.

4. This refrigerator/freezer is designed only for temporary storage of foods. Use for any other purposes (e.g. storage of chemicals or medical supplies such as vaccine and serum) could cause deterioration of stored items.

5. Do not throw anything onto the shelves or load more than 60 kg on each of them. They may fall off and cause injury.

6. Do not store bottles or cans near the air outlet. They may freeze up and break, causing a risk of injury.

7. Do not use combustible spray or place volatile and flammable substances near the unit. They could catch fire from a spark of a switch or the like.

8. Do not put anything into the machine compartment or the air inlet/outlet. The fan rotating rapidly inside may cause injury or heat.

9. Energise the refrigerator/freezer for 1 hour and check for proper temperature before putting foods in the cabinet.

10. Do not block the air inlet/outlet with foods.

11. Do not pack the cabinet with foods. Allow some space between them to ensure good air flow.

12. Do not put in warm or hot foods. Let them cool first, or they will raise the cabinet temperature and could deteriorate other foods in the cabinet or overload the refrigerator/freezer.

13. Make sure all items are snug on each shelf.

14. Moist or fresh foods and those with a strong smell like seafood should be wrapped up in a plastic film or packed in a container. Otherwise the foods may dry up or give their smells to other foods.

15. Foods containing acetic acid or yeast should be wrapped up in a plastic film. Otherwise they may accelerate corrosion of the evaporator and copper tubes, resulting in failure.

16. Foods intended for direct human consumption should be stored on the shelf in a proper container and protected from direct contact with the cabinet walls.

17. Do not use the freezer to freeze foods. It is designed only to store frozen foods. High quality ice cream may melt during defrost cycle and should not be stored in the freezer.

18. The doors may become difficult to open just after closed because of the negative pressure created inside the cabinet. Wait for about 30 seconds.

19. This appliance is not intended for use by persons (including children) with reduced physical, sensory or mental capabilities, or lack of experience and knowledge, unless they have been given supervision or instruction concerning use of the appliance by a person responsible for their safety.
Young children should be supervised to ensure that they do not play with the appliance.

[a] START UP

1) Plug in the unit.

2) The compressor and condenser fan motor will start in 3.5 minutes.

[b] CABINET TEMPERATURE SETTING

The cabinet temperature is factory-adjusted to 3°C for the refrigerator and -18°C for the freezer. If necessary, readjust the temperature as follows:

1) Open the front panel.

2) Press the set point button to display the current set point temperature.

3) Press and hold the set point button, and push the temperature control button until the temperature display window shows the desired temperature. The cabinet temperature is adjustable between -6°C and 12°C for the refrigerator and between -7°C and -25°C for the freezer.

Note: The above temperature range may not be available when the ambient temperature exceeds 30°C.

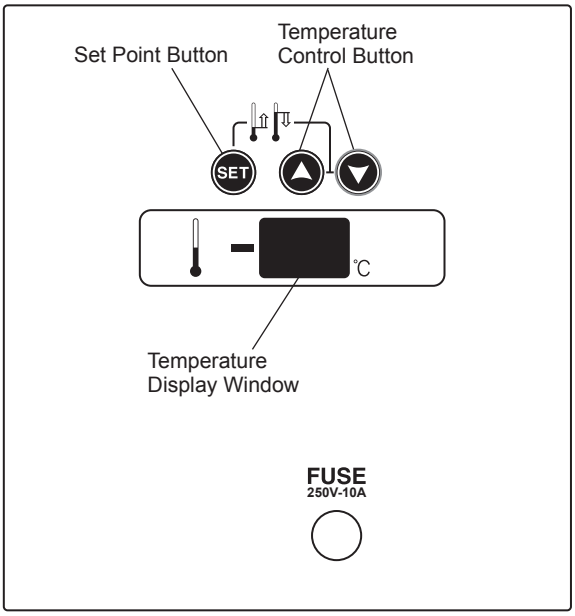

Fig. 10

4) The displayed cabinet temperature is adjusted to be almost equal to the temperature at the center of the cabinet without foods. But it can be different from the actual temperature depending on arrangement of stored foods, frequency of door opening or measuring points.

[c] RAPID REFRIGERATION

To refrigerate stored foods rapidly, choose the rapid refrigeration mode. The Interior fan motor will operate continuously to accelerate refrigeration.

1) Press and hold the temperature control button (down) for 5 seconds to operate the Interior fan motor continuously. The decimal point on the temperature display window will disappear during the rapid refrigeration.

2) To resume normal operation, press and hold the temperature control button (down) button for 5 seconds. The decimal point will reappear on the temperature display window.

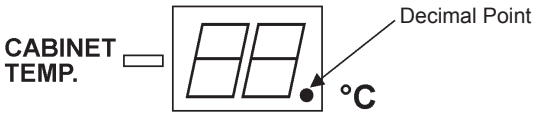

Fig. 11

[d] DEFROST

The refrigerator/freezer automatically defrosts the evaporator every 6 hours. The temperature display window shows “dF” during defrost cycle.
To start a manual defrost cycle, hold down the two temperature control buttons at the same time for a while. The next defrost cycle will begin in 6 hours.

[e] SHUT DOWN

1) Before shutting down the unit, move the stored foods into another refrigerator/freezer.

2) Unplug the unit or disconnect the main power supply.

3) When preparing the unit for long storage, clean the cabinet interior and door gaskets, dry them thoroughly and store the unit in a dry place.

III. MAINTENANCE AND CLEANING INSTRUCTIONS

IMPORTANT

1. Before carrying out any cleaning or maintenance operations, unplug the unit.

2. Do not touch or wet the machine compartment parts. This could result in failure or breakdown.

3. To prevent possible damage, do not clean the plastic parts with water above 40°C or in a dishwasher.

1. INTERIOR, EXTERIOR, SHELF

* Clean the interior and exterior at least once a week for sanitary use. The unit can be moved by unlocking the casters [caster models].

* Clean off the interior and exterior with a soft cloth soaked in cold or warm water containing the proper amount of neutral cleaner and wrung dry. Do not use a water jet to clean the machine compartment.

* Chemical agents other than neutral cleaner might cause damage to the interior and exterior surfaces.

* Any remaining detergent will damage metal or plastic surfaces. Use a soft cloth dampened with warm water to wipe it off.

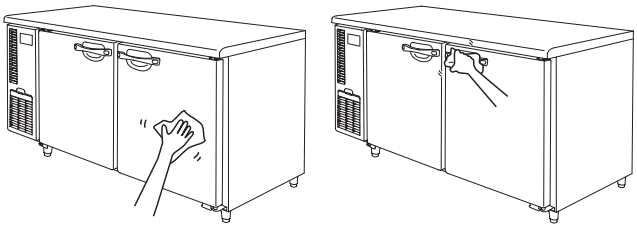

Fig. 12

* Do not use the following items. They could damage painted or plastic surfaces:

  Polishing powder, alcohol, thinner, benzine, acidic or alkaline detergent, hot water, petroleum, soap powder, metal scourer or brush, etc.
  Especially detergent to clean grease on ventilator or microwave.

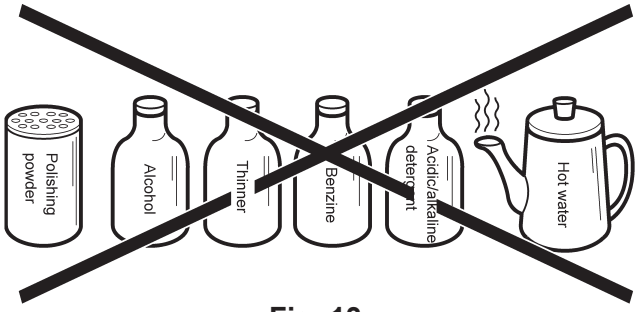

Fig. 13

Note: Some solutions other than the above may also damage painted or plastic surfaces. Immediately stop using such solutions if they cause any problems.

* The door gasket and its contact surface get soiled easily. Clean every surface of these parts thoroughly. Remnants of food will accelerate aging.

* Use a cloth to wipe off any water staying inside the cabinet.

2. AIR FILTER

IMPORTANT

To prevent deformation, do not wash the air filter with hot water above 40°C.

Plastic mesh air filters remove dirt or dust from the air, and keep the condenser from getting clogged. If the filters get clogged, the refrigerator/freezer's performance will be reduced.
Check the filter at least twice a month. When clogged, use warm water and a neutral cleaner to wash the filter. Do not operate the unit with the air filter removed, or the condenser will get clogged, resulting in failure.

1) Open the front panel, and remove the air filter. To prevent injury, do not touch the condenser fins directly.

2) Wash the air filter carefully with cold or warm water containing the proper amount of neutral cleaner. Rinse and dry the air filter thoroughly.

3) To refit the air filter, first hook it on the bottom of the condenser, then attach the air filter to the condenser.

4) Close the front panel.

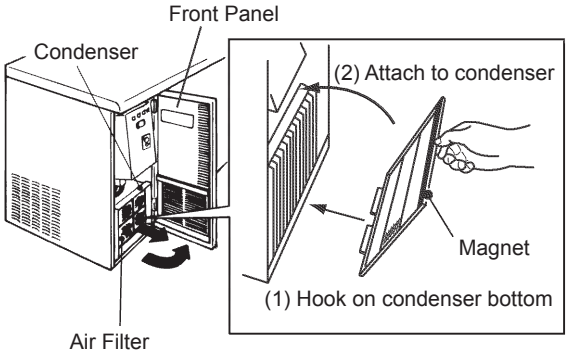

Fig. 14

IV. BEFORE CALLING A SERVICE AGENT

IMPORTANT

1. If the temperature display window on the operation panel indicates an error code or something seems wrong with the unit, check for possible causes according to the following instructions. If the problem still exists, immediately contact an authorized Hoshizaki service company.

2. When contacting a service company, let them know the model name, serial number, date of installation (see warranty card) and state of the trouble.

3. Do not attempt to repair the unit yourself.

1. TROUBLES WITH ERROR CODE INDICATION

When the temperature display window on the operation panel flashes alternately between an error code and the cabinet temperature, check the error code and follow the instructions below.

1) If one of the following error codes is displayed, immediately contact an authorized Hoshizaki service company.

Code	Problem
E3	Defrost time too long.
E8, E9	Thermistor defective.
EA, ED	Controller board defective.

2) If one of the following error codes is displayed, check and correct the condition of the unit according to the following instructions:

Code	Problem and Remedy
E1	Cabinet temperature too high. (1) Door(s) left open. Close. (2) Warm or hot foods inside. Take them out. (3) Ambient temperature too high. Avoid installation near high heat producing equipments or exposure to direct sunlight.
E2	Cabinet temperature too low. (1) Ambient temperature too low. Use in the range from 5°C to 43°C. (2) Frozen foods being defrosted. Error code will disappear when defrosting is completed.
E4, E7	Condenser clogged or ambient temperature too high. (1) Air filter clogged. Clean. (2) Ambient temperature too high. Avoid installation near high heat producing equipments or exposure to direct sunlight.

E1, E2: Automatically resets when a proper cabinet temperature is resumed.
E4, E7: After the above checks and corrections, turn the power supply off and back on again.

If the error code still appears in the temperature display window even after the above checks and corrections, immediately contact an authorized Hoshizaki service company.

2. TROUBLES WITHOUT ERROR CODE INDICATION

1) Unit fails to operate:
   (1) Unplugged.
   (2) Power failure.
   (3) Main power supply disconnected.

2) Poor cooling performance:
   (1) Ambient temperature too high (above 43°C).
   (2) Door(s) opened too often.
   (3) Cabinet temperature setting too high.
   (4) Too packed with foods or air inlet/outlet blocked.
   (5) Air filter not clean.
   (6) Door(s) left open.
   (7) Warm or hot foods inside.
   (8) Unit in defrost process. The cabinet temperature may rise temporarily during defrost cycle but will not affect the foods inside.

3) Condensation around door(s):
   (1) Ambient humidity too high.
   (2) Door(s) not closed tightly.

4) Noise:
   (1) Normal operating sounds from compressor, condenser fan motor or interior fan motor.
   (2) Installed on an unsteady floor. Contact an authorized Hoshizaki service company.
   (3) Not leveled in the left-to-right or front-to-rear directions. Contact an authorized Hoshizaki service company.

5) Frosting inside compartment:
   (1) Ambient humidity too high.
   (2) Door(s) opened too often.

V. DISPOSAL

When disposing of the refrigerator/freezer, contact an authorized Hoshizaki service company or a specialized waste disposal company.

IMPORTANT

The insulation foaming agent used for the unit body contains flammable gas cyclopentane. With this in mind, dispose of the refrigerator/freezer properly.

VI. WARRANTY

Hoshizaki warrants to the original owner/user that all Hoshizaki branded products shall be free of defects in material and/or workmanship for the duration of the “warranty period”. The warranty shall be effective for one year from the date of installation.
Hoshizaki’s liability under the terms of the warranty are limited and shall exclude routine servicing, cleaning, essential maintenance and/or repairs occasioned by misuse and installations not in accordance with Hoshizaki guidelines.

Warranty repairs should be completed by an approved Hoshizaki dealer or service agency using genuine Hoshizaki components.

To obtain full details of your warranty and approved service agency, please contact your dealer/supplier, or the nearest Hoshizaki Service office.

联系人：

星崎冷热机械(上海)有限公司
上海市静安区天目西路128号嘉里企业中心第一座501室
邮编：200070
电话： +86 21 5228-8181　　传真： +86 21 5228-0113

专用微信公众号

星崎香港有限公司
香港九龍觀塘巧明街95號世達中心17樓G室
电话： +852 2866-2108　　传真： +852 2866-2109

Hoshizaki Singapore Pte Ltd
18 Boon Lay Way #07-142 Tradehub 21, Singapore 609966
Tel: +65 6225-2612　　Fax: +65 6225-3219

台湾星崎股份有限公司
106 台北市大安區敦化南路一段337號5樓
Tel: +886 2-2706-8818　　Fax: +886 2-2708-7999

Hoshizaki Lancer Pty Ltd
5 Toogood Avenue, Beverley SA 5009 Australia
Tel: +61 8-8268-1388　　Fax: +61 8-8268-1978

Contact:

Hoshizaki Shanghai Co., Ltd.
Room 501, Tower 1, Kerry Enterprise Centre, 128 Tianmu Road West,
Jing'an District, Shanghai, 200070 China
Tel: +86 21 5228-8181　　Fax: +86 21 5228-0113

Hoshizaki Hong Kong Co., Limited
Unit G, 17/F, World Tech Center, No. 95 How Ming Street,
Kwun Tong, Kowloon, Hong Kong
Tel: +852 2866-2108　　Fax: +852 2866-2109

Hoshizaki Singapore Pte Ltd
18 Boon Lay Way #07-142 Tradehub 21, Singapore 609966
Tel: +65 6225-2612　　Fax: +65 6225-3219

Hoshizaki Taiwan, Inc.
5F, No. 337, Sec. 1, Dunhua S. Rd., Da'an Dist, Taipei City 106, Taiwan (R.O.C.)
Tel: +886 2-2706-8818　　Fax: +886 2-2708-7999

Hoshizaki Lancer Pty Ltd
5 Toogood Avenue, Beverley SA 5009 Australia
Tel: +61 8-8268-1388　　Fax: +61 8-8268-1978
info@hoshizaki.com.au　　http://www.hoshizaki.com.au

To register your product for warranty with Hoshizaki, visit
http://www.hoshizaki.com.au/warranty-registration
or scan the QR code.

生产商：

星崎电机(苏州)有限公司
江苏省苏州工业园区青丘街15号　　邮编：215126
电话： +86 512-62807850
传真： +86 512-62807860

Manufacturer:

HOSHIZAKI (SUZHOU) CO., LTD.
No. 15 Qingqiu Street, Suzhou Industrial Park, Suzhou 215126 China
Tel: +86 512-62807850
Fax: +86 512-62807860

HOSHIZAKI